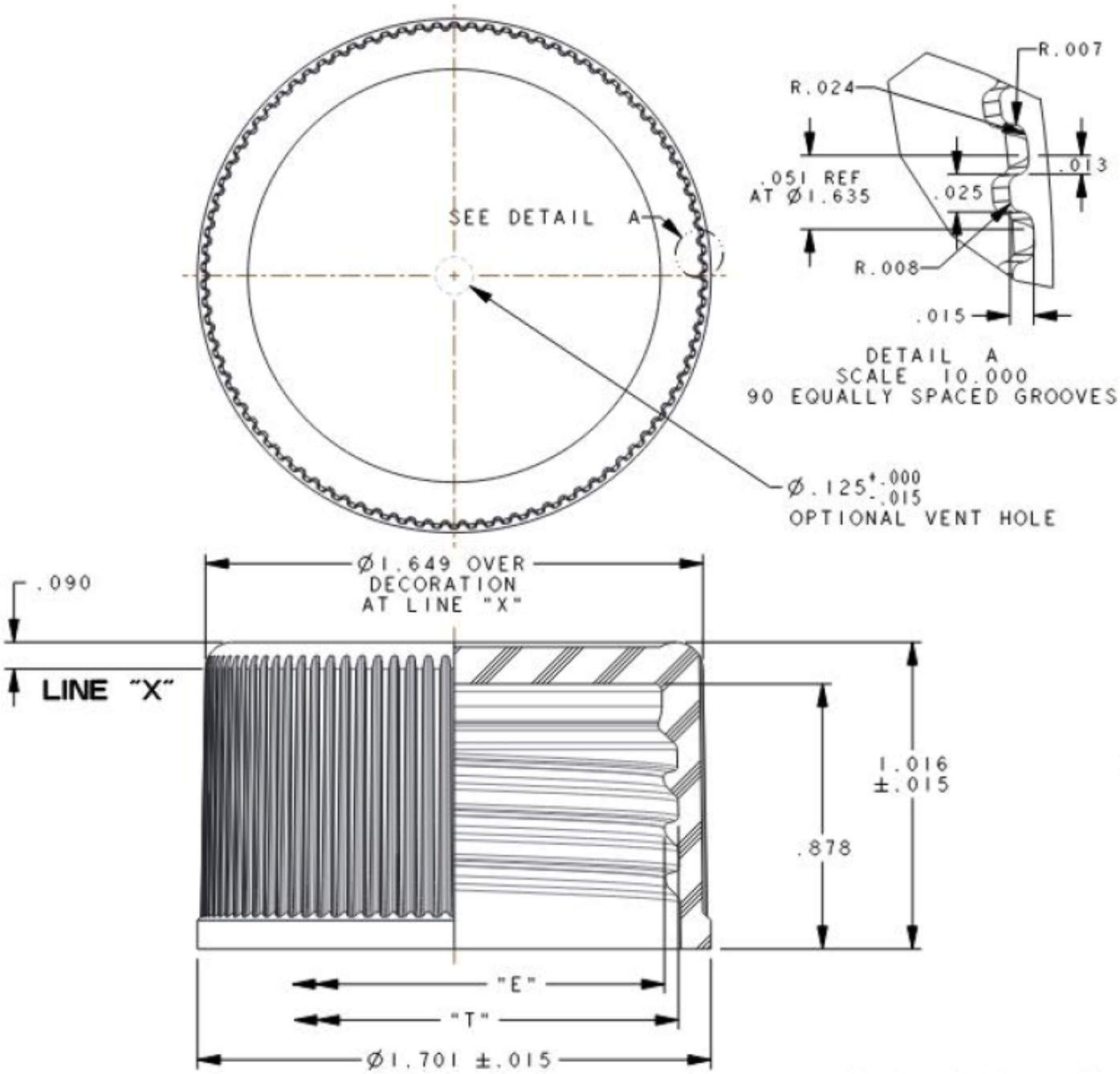

Description: 38-439 black polypropylene (PP) closure lined with a polyethylene (PE) core encapsulated between two layers of polyethylene film

DISTRIBUTED BY: Pipeline Packaging

REF NO.: DWG31654

DESCRIPTION: 38-439 Black PP Plastic Cap, F-422 Liner

DISCLAIMER
THIS INFORMATION IS PROVIDED AS A GENERAL GUIDE, INCLUDING DIMENSIONS. IT IS THE CUSTOMER'S RESPONSIBILITIES TO SELECT THE PROPER CONTAINER FOR PRODUCT AND APPLICATION COMPATIBILITY.