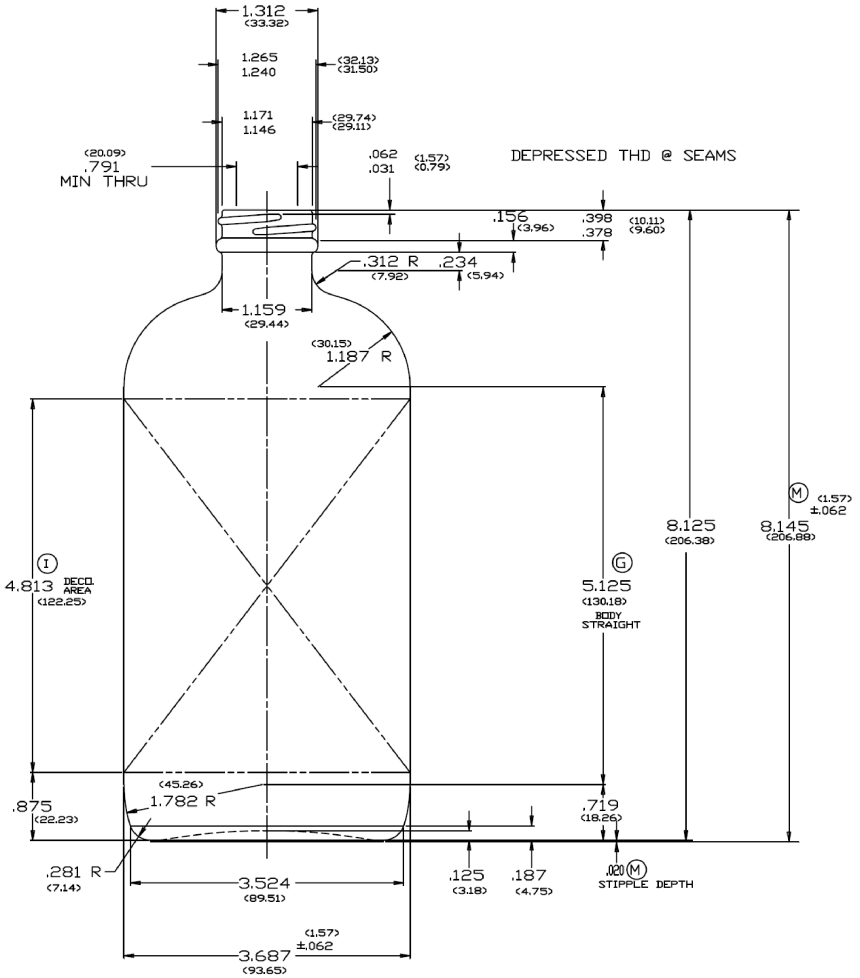

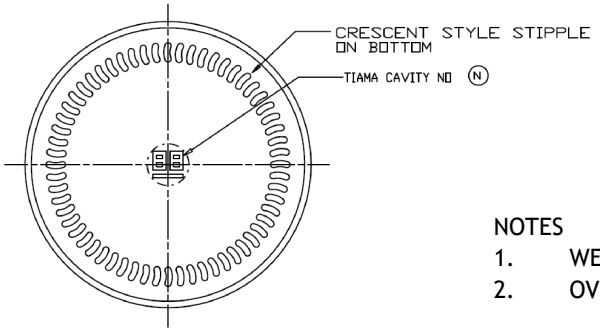

NOTES

1. WEIGHT - 17.002 oz
2. OVERFLOW CAPACITY - 985.9 - 1008.1 cc

DISCLAIMER

THIS INFORMATION IS PROVIDED AS A GENERAL GUIDE, INCLUDING DIMENSIONS. IT IS THE CUSTOMER'S RESPONSIBILITIES TO SELECT THE PROPER CONTAINER FOR PRODUCT AND APPLICATION COMPATIBILITY.

DISTRIBUTED BY: Pipeline Packaging

REF NO.: DWG10292

DESCRIPTION: 32 oz Glass Boston Round, 33-400